HDMI 2.1a A Type Jack Connector

P/N: 30279

P/N: 30280

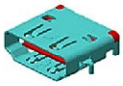
P/N: 30284

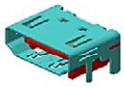
P/N: 30285

P/N: 30286

Overview

HDMI® Specification-HDMI 2.1a is the latest version of the HDMI® specifications, supporting a higher range of video resolutions and refresh rates. Including 8K@60Hz, 4K@120Hz, and resolutions up to 10K. The dynamic HDR formats are also supported, and the bandwidth capability is increased up to 48Gbps. The new Ultra High Speed HDMI Cable supports 48Gbps bandwidth. The cable ensures ultra-high bandwidth dependent features and also supports transmissions of uncompressed 8K video with HDR.

It also features exceptionally low EMI (Electro-Magnetic Interference), which reduces interference with nearby wireless devices. And the cable is downward compatible with the existing HDMI devices.

HDMI Developing

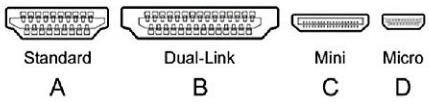

HDMI Versions					
	1.0-1.2a	1.3-1.3a	1.4-1.4b	2.0-2.0b	2.1a
Released date	2002/12(1.0) 2004/05(1.1) 2005/08(1.2) 2005/12(1.2a)	2006/06(1.3) 2006/11(1.3a)	2009/06(1.4) 2010/03(1.4a) 2011/10(1.4b)	2013/09(2.0) 2015/04(2.0a) 2016/03(2.0b)	2017/11
Signal Specifications					
Transmission bandwidth	4.95 Gbit/s	10.2 Gbit/s	10.2 Gbit/s	18.0 Gbit/s	48.0 Gbit/s
Maximum transfer data rate	3.96 Gbit/s	8.16 Gbit/s	8.16 Gbit/s	14.4 Gbit/s	42.6 Gbit/s
TMDS Clock	165 MHz	340 MHz	340 MHz	600 MHz	1200 MHz
Minimize transmission of differential signal paths	3	3	3	3	4
Encoding	8b/10b	8b/10b	8b/10b	8b/10b	16b/18b
Compression (optional)	--	--	--	--	DSC 1.2

www.acesconn.com

Product Catalog

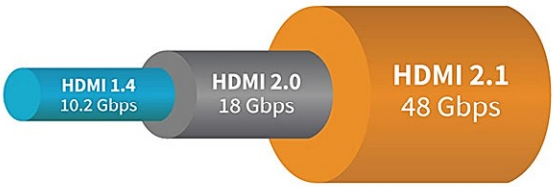

ACES Electronics Co., Ltd.				Taiwan Type A
30279-01902-Z01	30280-01902-001	30284-01902-001	30285-01902-001	30286-01902-001

All products are approved by HDMI Licensing Administrator, Inc.
(https://www.hdmi.org/resource/connectors)

P/N	Type	Interface	PCB Mounting	Operation Direction	Product Height (mm)	Product Length (mm)	Center Height (mm)	PCB to Top Height (mm)	Remark	Application
30279	A type	Reverse Sink	T/H	R/A	6.75	13.90	-1.44	2.53	HDMI 2.1a	NB series
30280	A type	Reverse Sink	SMT	R/A	6.70	12.00	-1.52	2.41	HDMI 2.1a+RFI	NB series
30284	A type	Standard Sink	T/H	R/A	5.55	12.87	-0.2	2.58	HDMI 2.1a	Gaming NB
30285	A type	Standard	SMT	R/A	6.14	12.10	3.36	6.14	HDMI 2.1a	Non-NB series
30286	A type	Standard	SMT	R/A	5.98	12.10	3.2	5.98	HDMI 2.1a	Gaming NB

Applications

NB

Gaming NB

Set Top Box

Projectors

TV

Robot Vacuum Cleaner

ACES GROUP

P/N: 30279

P/N	Description	Center Height (mm)	PCB to Top Height (mm)	Product Height (mm)
30279-01902-Z01	T/H R/A RVS sink type.	-1.44mm	2.53mm	6.75mm

Features

Bandwidth: 48Gbps
Current: 0.5A
Durability: 10,000 cycles
Application: NB

Kick-off Date: 2022/1/10
Released Date: 2022/4/14
Capacity: 500K/M

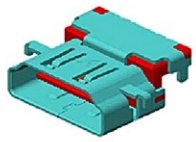

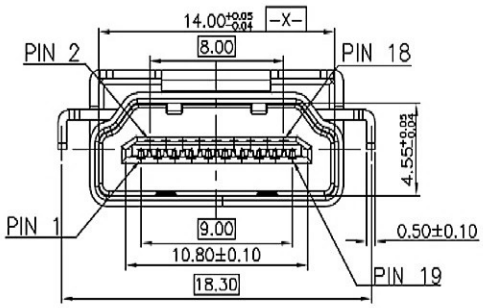

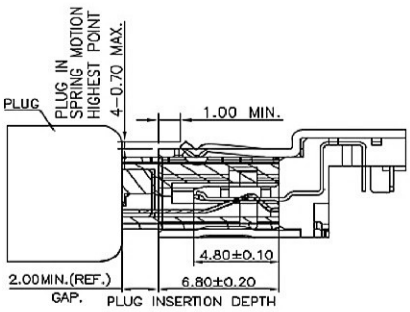

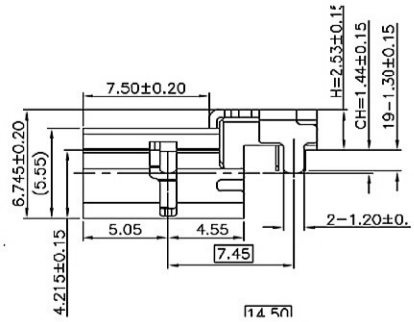

P/N: 30280

P/N	Description	Center Height (mm)	PCB to Top Height (mm)	Product Height (mm)
30280-01902-001	SMT R/A RVS sink type.	-1.52mm	2.41mm	6.7mm

Features

Bandwidth: 48Gbps
Current: 0.5A
Durability: 10,000 cycles
Application: NB

Kick-off Date: 2021/12/20
Released Date: 2022/4/22
Capacity: 500K/M

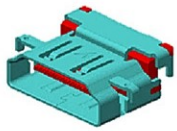

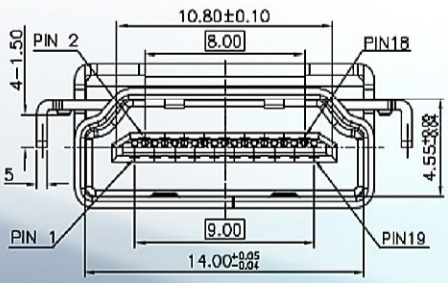

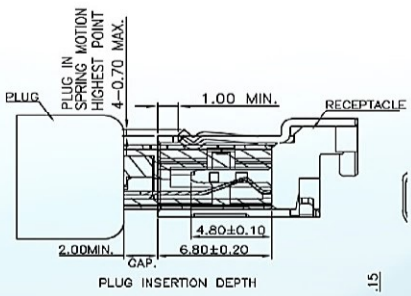

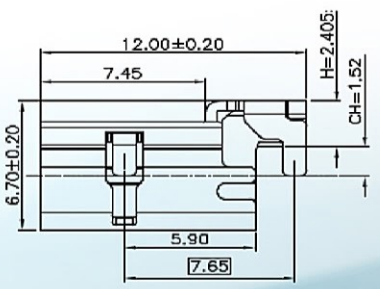

P/N: 30284

P/N	Description	Center Height (mm)	PCB to Top Height (mm)	Product Height (mm)
30284-01902-001	T/H R/A STD sink type.	-0.2mm	2.58mm	5.55mm

Features

Bandwidth: 48Gbps
Current: 0.5A
Durability: 10,000 cycles
Applications: Gaming NB/NB

Kick-off Date: 2022/5/25
Expected Released: Q4 2022
Capacity: 500K/M

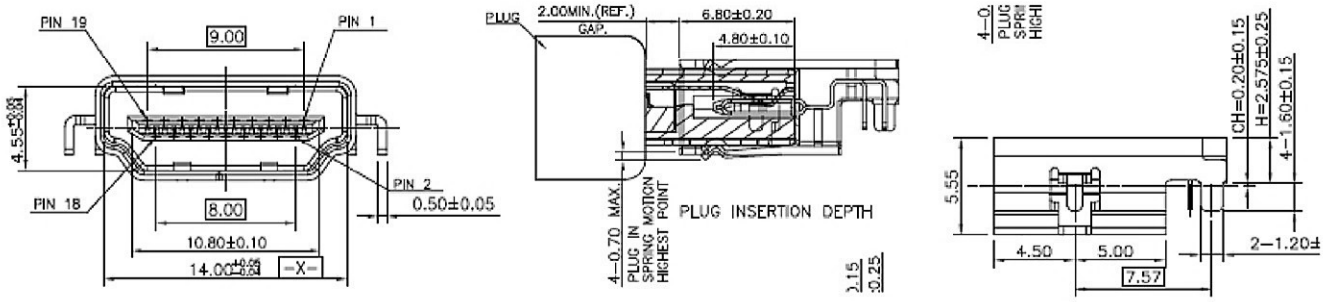

P/N: 30285

P/N	Description	Center Height (mm)	PCB to Top Height (mm)	Product Height (mm)
30285-01902-001	SMT R/A STD type. (top-mount)	3.36mm	6.14mm	6.14mm

Features

Bandwidth: 48Gbps
Current: 0.5A
Durability: 5,000 cycles
Applications: TV/Set-top Box/Projector/Robot Vacuum Cleaner

Kick-off Date: 2022/5/9
Expected Released: Q4 2022
Capacity: 400K/M

*30285 is a popular standard type for the non-NB market. Please promote to your customers.

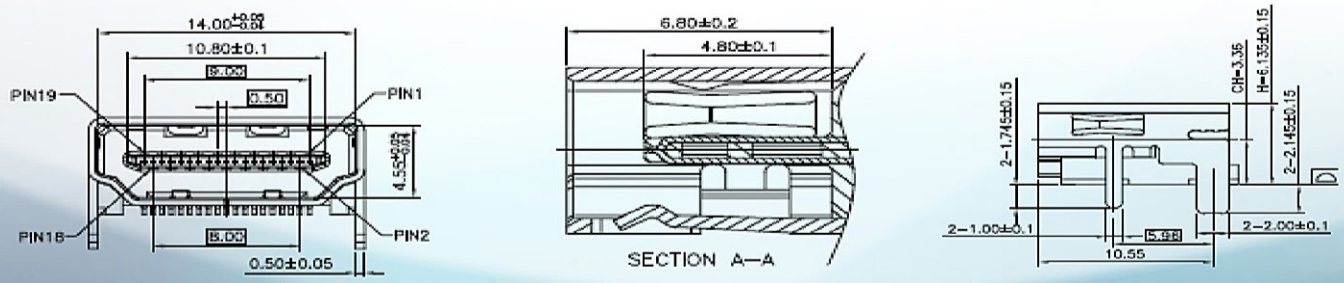

P/N: 30286

P/N	Description	Center Height (mm)	PCB to Top Height (mm)	Product Height (mm)
30286-01902-001	SMT R/A STD type. (top-mount)	3.2mm	5.98mm	5.98mm

Features

Bandwidth: 48Gbps
Current: 0.5A
Durability: 5,000 cycles
Application: Gaming NB
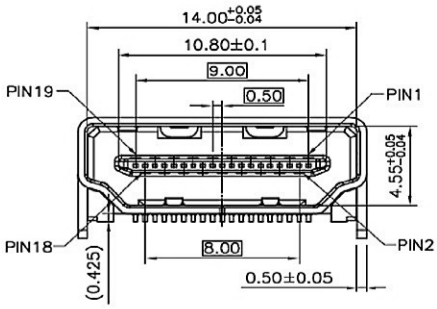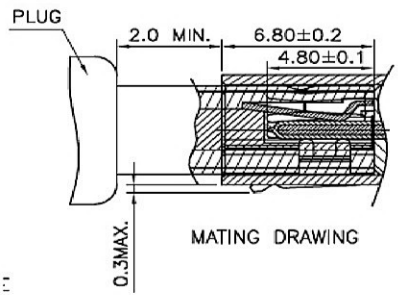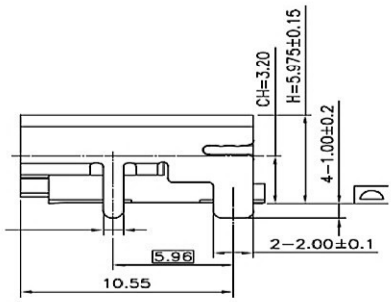
Kick-off Date: 2022/6/23
Expected Released: Q4 2022
Capacity: 400K/M